MACAP

Model
M5D

Evol.	Table	Date
1	1/2	06/11/2007

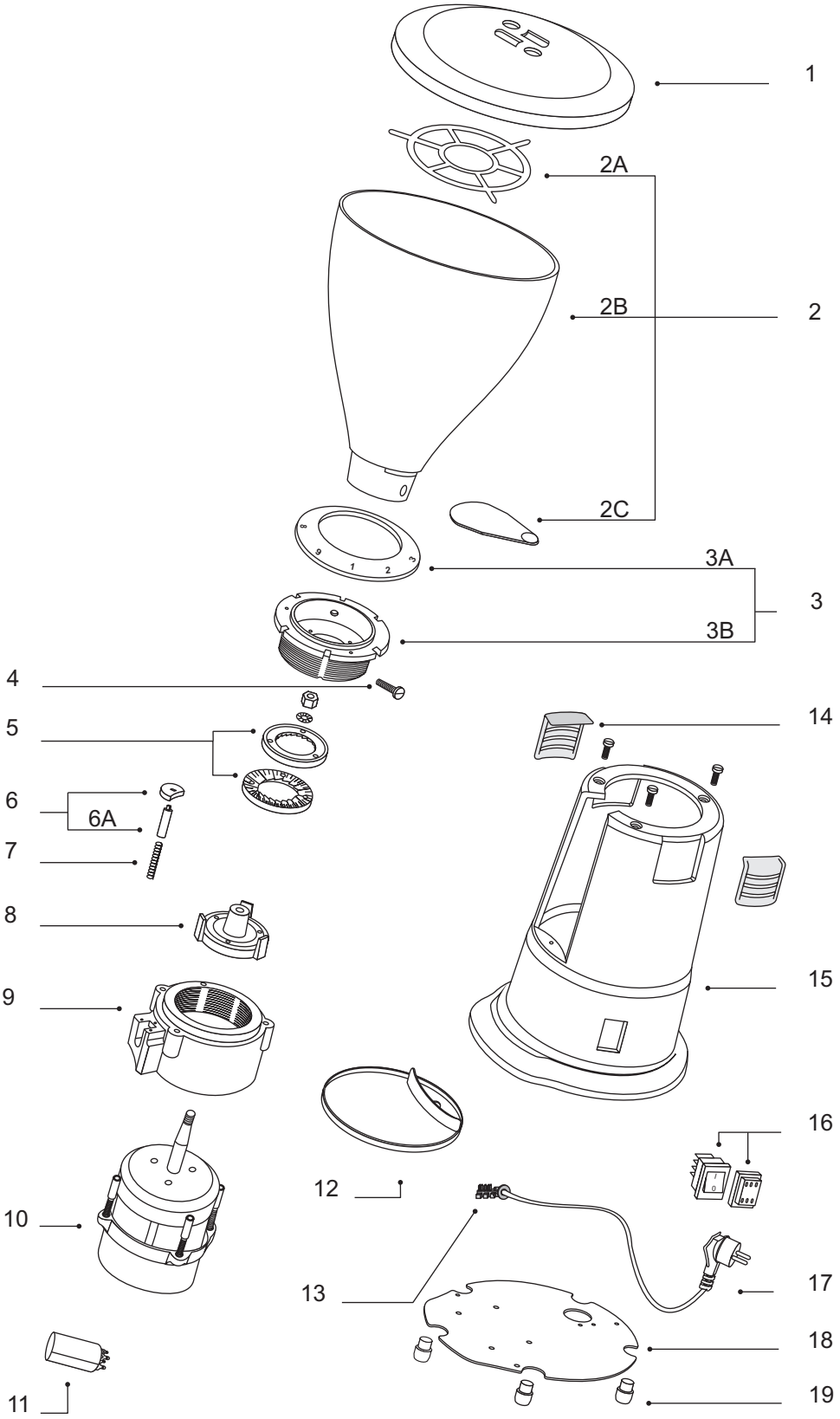

	N.	Code	Features
■	1	C0007M156	
■	2	C0007M157	
	2A	C0007M157A	
	2B	C0007M157B	
	2C	C0007M157C	
■	3	C0002M1091A	
	3A	C0007M158	
	3B	C0002M109A	
■	4	C0004M139	
■	5	C0004M135A	
■	6	C0002M102	
	6A	C0002M102A	
■	7	C0008M109	
■	8	C0002M108A	
■	9	C0001M1442	
■	10	C00061230	230V-50HZ
■		C000612301	220V-60HZ
■		C0006123021	110V-60HZ
■	11	C00061111	230V-50HZ
■		C00061107	220V-60HZ
■		C00061116	110V-60HZ
■	12	C0007M115	
■	13	C00061611	
■	14	C0007M141	
■	15	C0001M143	
■	16	C00061021	
■	17	C00061517	230V-50HZ
■		C00061517	220V-60HZ
■		C000615171	110V-60HZ
■	18	C0004M509A	
■	19	C000716140	

Descriptions	

■	AVAILABLE
	NOT AVAILABLE

MACAP srl
Via Toniolo 18 - 30030 - Maerne - (VE) - Italy - Tel. +39 041 5030466 Fax +39 041 5030477
www.macap.it - www.dynamometrictamper.com - info@macap.it